INSTALLATION INSTRUCTIONS

PLEASE READ CAREFULLY AND SAVE THESE INSTRUCTIONS, AS YOU MAY NEED THEM AT ALATER DATE.

CAUTION – Turn off the main power at the circuit breaker before installing the Fixture, in order to prevent possible shock.

Remove the fixture and the mounting package from the box and make sure That no parts are missing by referencing the illustrations on the installation Instructions.

FOR CEILING MOUNT (Fig. 4& 5)

1. A)Place the #8-32 HEX NUT(3) onto the #8-32 FXTURE MOUNTING SCREW(4). And attach the FIXTURE MOUNTING SCREW to the MOUNTING RACKET(2).or universal mounting plate (whichever is provided). Do not tighten the HEX NUTS at this time.(Fig.4)

B) If the fixture uses a single 1/8"IPS NIPPLE(4) for mounting, thread the 1/8"IPS HEX NUT(3) onto the NIPPLE, and screw the NIPPLE into the MOUNTING BRACKET(2).without tightening the HEX NUT(3).(Fig.5)

2. Pull the power supply wires out from the OUTLET BOX (1) and mount the MOUNTING BRACKET (2) or the universal mounting plate to the OUTLET BOX(1), using MOUNTING SCREWS(10).

3. Attach the power supply wire to the fixture lead wire by connecting BLACK to BLACK(6),and WHITE to WHITE(5). Connect the FIXTURE GROUND WIRE (8) to the SUPPLY GROUND WIRE(7) using a WIRE NUT(9)(not included).

4. Place the CANOPY(11) on the fixture over the OUTLET BOX(1) and onto the fixture mounting screws (or NIPPLE) ,and adjust the #8-32 fixture mounting screws (or NIPPLE) until they protrude out from the CANOPY(11) 1/4". Remove the CANOPY(11) and secure the position of the fixture mounting screw (or NIPPLE) by tightening the HEX NUT(S)(3) against the MOUNTING BRACKET(2). Place the CANOPY(11) back onto the fixture mounting screws,(or NIPPLE), and secure into place using the DECORATIVE NUT(12) provided.

5. Screw in light bulbs that do not exceed the maximum wattage specified on the fixture's wattage rating label, into the socket(s) on the fixture.

INSTALLATION COMPLETED

FOR CHAIN-SUSPENDED CEILING MOUNT(Fig.6)

1. Take the parts out of the mounting package and thread a 1/8" IPS HEX NUT (5) several turns onto each end of the NIPPLE (4). Screw the end of the NIPPLE (4) several turns into the threaded hole of the MOUNTING BRACKET (2) but do not tighten the HEX NUTS (5). Pull the SUPPLY WIRES (9 & 11) and the GROUND WIRE (8) out from the OUTLET BOX (1) and attach the MOUNTING BRACKET (2) assembly to the OUTLET BOX (1) using the slotted holes on the MOUNTING BRACKET (2) and the MOUNTING SCREWS (3) provided.

2. Thread the SCREW COLLAR LOOP (6) onto the end of the NIPPLE (4) that is facing down. Place the CANOPY (15) over the OUTLET BOX (1) and adjust the SCREW COLLAR LOOP (6) and NIPPLE (4) until the midpoint of the outside threads on the SCREW COLLAR LOOP (6) is centered (aligned) with the surface of the CANOPY (15). Remove the CANOPY (15) and tighten the HEX NUTS (5) down on the MOUNTING BRACKET (2) and the SCREW COLLAR LOOP (6).

3. Open up the end links of the CHAIN (17) and attach one end of the CHAIN (17) onto the FIXTURE LOOP (18) (not shown) of the main section of the fixture. Slide the THREADED RING (16) and the CANOPY (15) onto the CHAIN (17) (in that order) and attach the other end of the CHAIN (17) to the SCREW COLLAR LOOP (6). Close the ends of the chain links.

4. Unravel the fixture's lead and ground wires and thread the them through every other link of the CHAIN (17) and out through the SCREW COLLAR LOOP (6) and NIPPLE (4) assembly, starting with the chain link attached to the FIXTURE LOOP (18) (not shown) of the main section of the fixture.

5. Attach the power supply wires to the fixture lead wires by connecting the BLACK SUPPLY WIRE (9) to the SMOOTH FIXTURE LEAD WIRE (or with printing on the wire)(10) and the WHITE SUPPLY WIRE (11) to the RIBBED FIXTURE LEAD WIRE (12). Loop the FIXTURE GROUND WIRE (7) around the GROUND SCREW (14) of the MOUNTING BRACKET (2). (Note: Be sure to leave an extra 3" length of the FIXTURE GROUND WIRE (7) for connection to the SUPPLY GROUND WIRE (8)). Tighten the GROUND SCREW (14). Connect the remaining FIXTURE GROUND WIRE (7) to the SUPPLY GROUND WIRE (8) using a WIRE CONNECTOR (13) (not included).Place wiring and connections inside the OUTLET BOX (1). (See Fig. 1)

6. Slide the CANOPY (15) and the THREADED RING (16) up the CHAIN (17). Place the CANOPY (15) over the OUTLET BOX (1) and secure in place by screwing the THREADED RING (16) onto the SCREW COLLAR LOOP (6).

7. Screw light bulbs into the lamp socket. Note: Make sure they do not exceed the maximum wattage specified on the fixture's wattage rating label.
INSTALLATION IS NOW COMPLETED

Fig.4

1.OUTLET BOX
2.MOUNTING BRACKET
3.#8/32 HEX NUT
4.FIXTURE MOUNTING SCREW
5.WHITE TO WHITE WIRE CONNECTION
6.BLACK TO BLACK WIRE CONNECTION
7.SUPPLY GROUND WIRE
8.FIXTURE GROUND WIRE
9.WIRE NUT
10.MOUNTING SCREW
11.CANOPY
12.DECORATIVE NUT

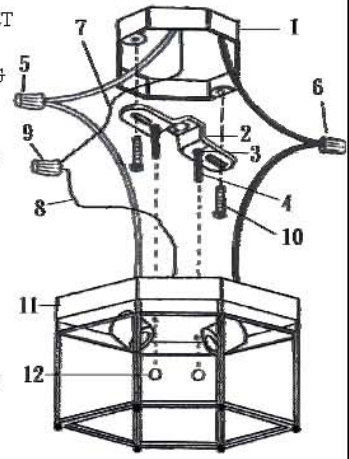

Fig.5

1.OUTLET BOX
2.MOUNTING BRACKET
3.1/8" IPS HEX NUT
4.NIPPLE
5.WHITE TO WHITE WIRE CONNECTION
6.BLACK TO BLACK WIRE CONNECTION
7.SUPPLY GROUND WIRE
8. FIXTURE GROUND WIRE
9. WIRE NUT
10.MOUNTING SCREW
11.CANOPY
12. .DECORATIVE NUT

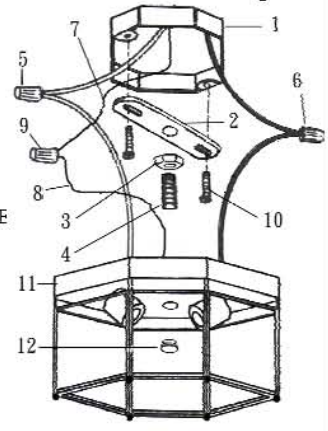

Fig.6

1. OUTLET BOX
2. MOUNTING BRACKET
3. MOUNTING SCREW
4. NIPPLE
5. 1/8" IPS HEX NUT
6. SCREW COLLAR LOOP
7. FIXTURE GROUND WIRE
8. GROUND WIRE
9. BLACK SUPPLY WIRE
10. SMOOTH FIXTURE LEAD WIRE
11. WHITE SUPPLY WIRE
12. RIBBED FIXTURE LEAD WIRE
13. WIRE CONNECTOR
14. GROUND SCREW
15. CANOPY
16. THREADED RING
17. CHAIN

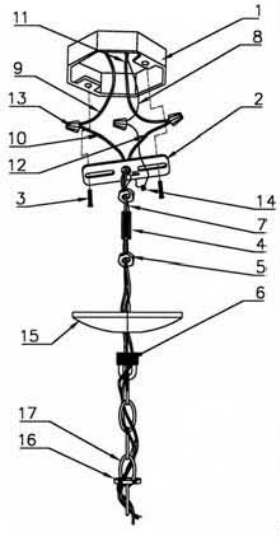

8x89-wm

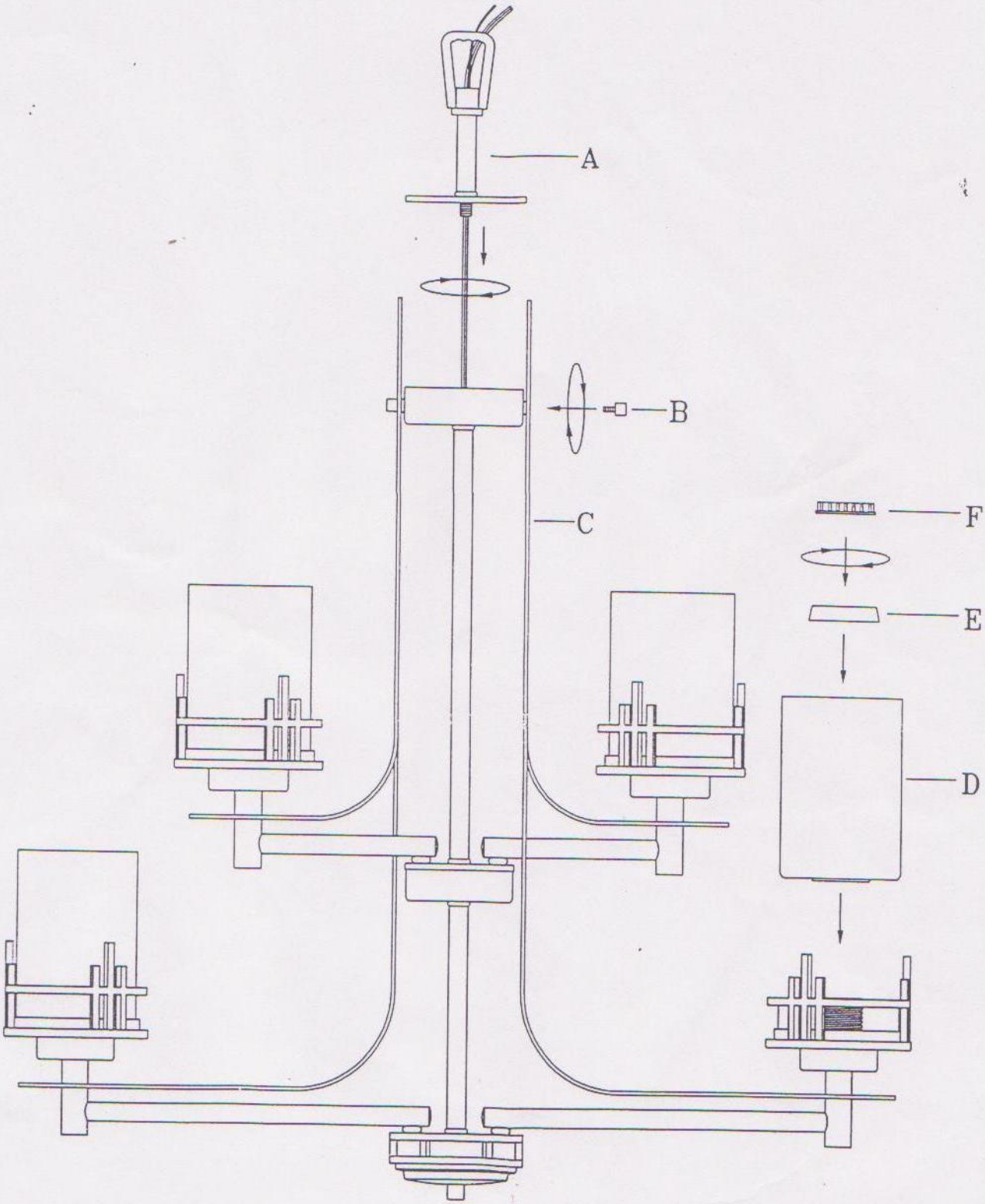

ASSEMBLY SEQUENCE:

1.
2. B → C
3. A → C
4. D → C
5. E → C
6. F → C